Scrabble rack antenna switch
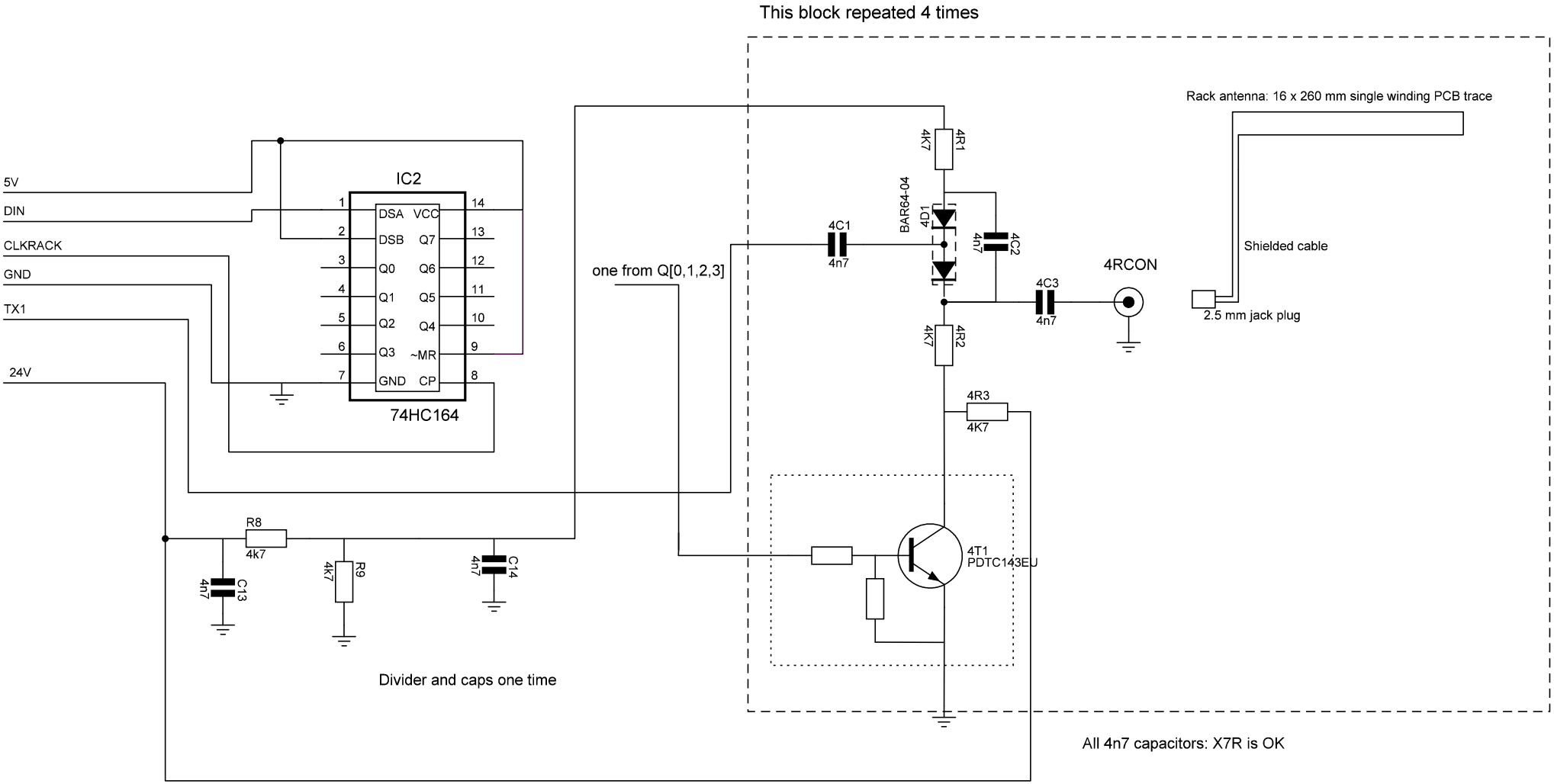
(C) Ben Bulsink, 2017-2022